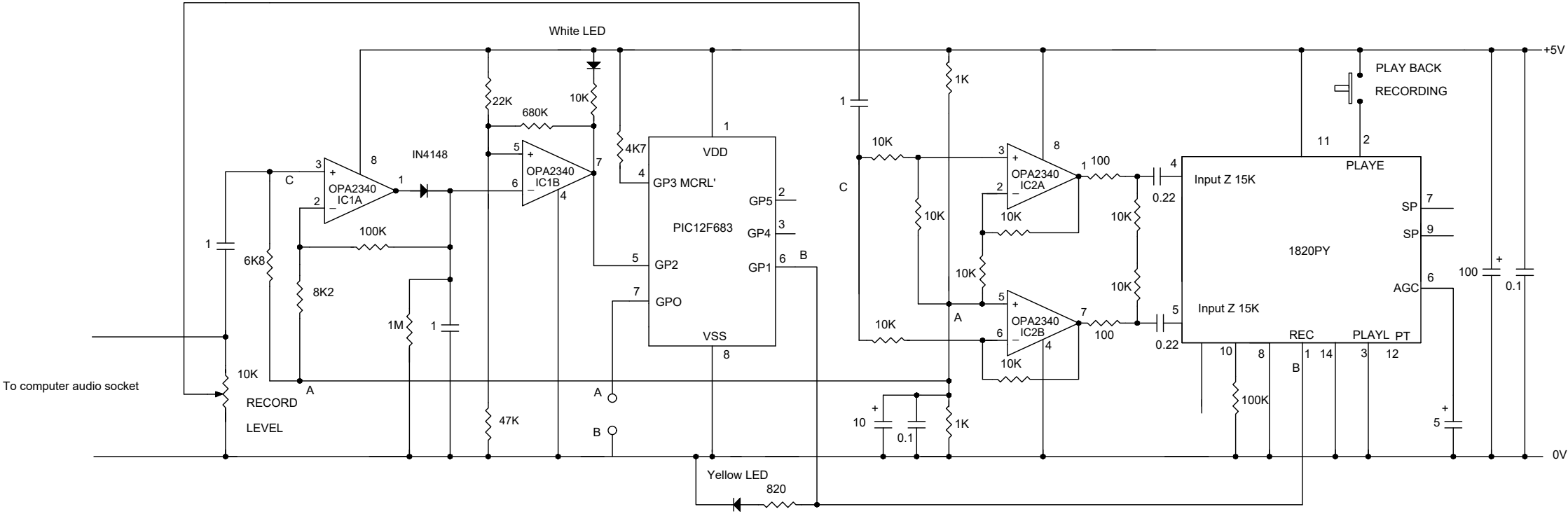

(1) With A and B not connected the recoding will commense almost immediately after receiving the input signal. It will stop 2 seconds later

(2) With A and B connected the recoding will commence 2 seconds after the input signal is received. It will stop 2 seconds later.